LIST OF FOULING TRACK CIRCUIT

S/NO.	FOULING TRACK CIRCUIT	MOVEMENT
1.	101T	ALL MOVEMENTS WITH POINT X–OVER 103–104 REVERSE.
2.	104T	ALL MOVEMENTS WITH POINT X–OVER 101–102 REVERSE.
3.	121T,127T	ALL MOVEMENTS WITH POINT X–OVER 125–126 REVERSE.
4.	126T	ALL MOVEMENTS WITH POINT X–OVER 121–122 REVERSE.
5.	128/135T	ALL MOVEMENTS WITH POINT X–OVER 131–132 REVERSE.
6.	143T	ALL MOVEMENTS WITH POINT X–OVER 145–146 REVERSE.
7.	145/146T	ALL MOVEMENTS WITH POINT X–OVER 143–144 REVERSE.

UP DIRECTION ASPECT SEQUENCE CHART FOR SIGNALS

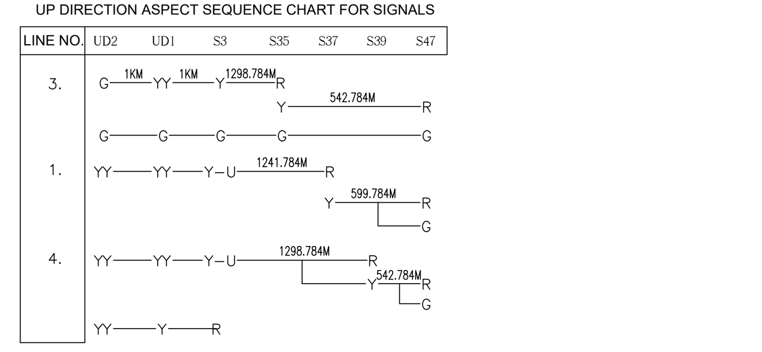

DN. DIRECTION ASPECT SEQUENCE CHART FOR SIGNALS

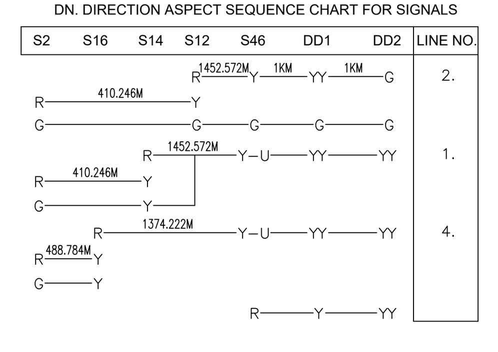

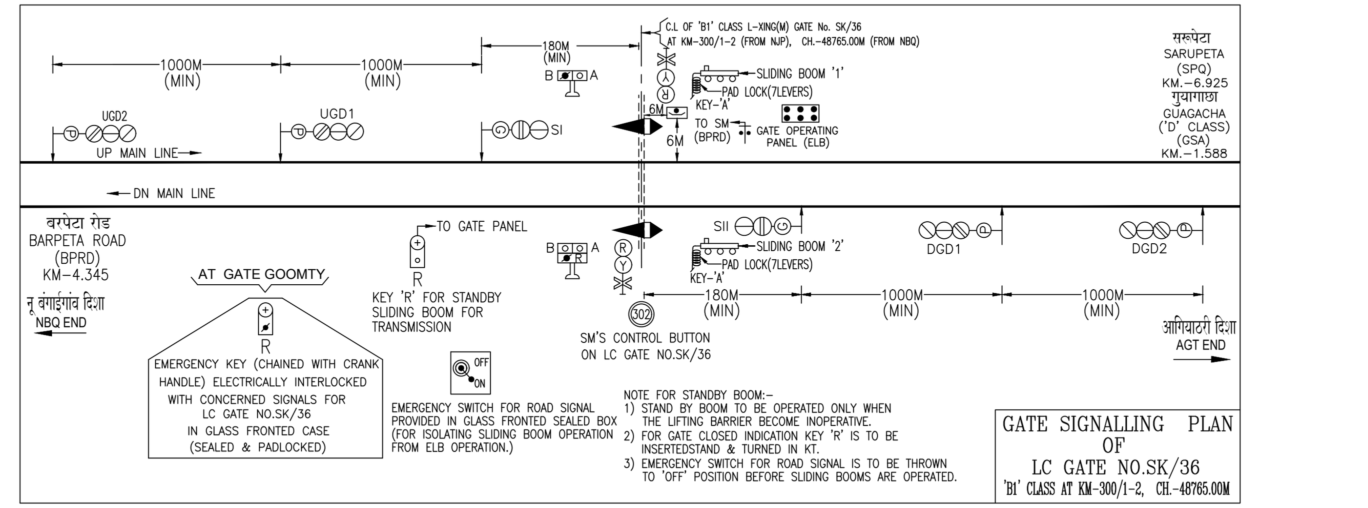

Signature block	
CTPM	RASHMI GAUTAM Digitally signed by RASHMI GAUTAM Date:2022.03.14 03:20:47 +05'30'
RNY–DRM	VIJAY KUMAR SRIVASTAVA Digitally signed by VIJAY KUMAR SRIVASTAVA Date:2022.03.10 10:16:20 +05'30'
RNY–SRDOM	AMIT SINGH Digitally signed by AMIT SINGH Date:2022.03.07 04:09:20 +05'30'
RNY–SRDSTE	AMIT KUMAR MANI Digitally signed by AMIT KUMAR MANI Date:2022.03.08 06:15:33 +05'30'
CSTE–C–2–MLG	UMESH KUMAR Digitally signed by UMESH KUMAR Date:2022.03.02 05:31:51 +05'30'
DY CSTE–C–PL	UTPAL KALITA Digitally signed by UTPAL KALITA Date:2022.03.02 05:27:31 +05'30'
SSTE–C–PL	Kanti Lal Das Digitally signed by Kanti Lal Das Date:2022.03.02 05:00:42 +05'30'
ASTE–C–PL	Hemanta . Kr Das Digitally signed by Hemanta . Kr Das Date:2022.03.02 04:52:30 +05'30'
SSE–C–SIG–PL	Amlan Barthakur Digitally signed by Amlan Barthakur Date:2022.03.02 05:13:45 +05'30'
JE–C–SIG–PL	Ranjan Jyoti Hazarika Digitally signed by Ranjan Jyoti Hazarika Date:2022.03.02 04:55:46 +05'30'
SSE–C–DRG–PL	Tapan . Kr. Mukherjee Digitally signed by Tapan . Kr. Mukherjee Date:2022.03.02 04:49:25 +05'30'

SIGNAL OVERLAP OF UP HOME SIGNAL NO. S3.

S/NO.	ROUTE	OVERLAP
1.	S3A	120M (MIN) FROM UP STARTER SIG. NO. S35 UPTO UP ADV. STR. SIG. NO. S47 WITH POINT NO. 121–122, 125–126 & 129–130 NORMAL.
2.	S3B	120M (MIN) FROM UP STARTER SIG. NO. S39 UPTO DEAD END WITH POINT NO. 129–130 NORMAL.
3.	S3B1	120M (MIN) FROM UP STARTER SIG. NO. S39 UPTO UP ADV. STR. SIG. NO. S47 WITH POINT NO. 121–122, 125–126 NORMAL & 129–130 REVERSE.
4.	S3D	120M (MIN) FROM UP STARTER SIG. NO. S37 UPTO DS POINT NO. 135 WITH POINT NO. 131–132, 127–128 & 135 NORMAL.
5.	S3D1	120M (MIN) FROM UP STARTER SIG. NO. S37 UPTO UP ADV. STR. SIG. NO. S47 WITH POINT NO.131–132,125–126, 123–124 NORMAL & 127–128,121–122 REVERSE.

SIGNAL OVERLAP OF DN. HOME SIGNAL NO. S46.

S/NO.	ROUTE	OVERLAP
1.	S46B	120M (MIN) FROM DN. STARTER SIG. NO. S16 UPTO DS POINT NO. 109 WITH POINT NO.107–108 NORMAL.
2.	S46B1	120M (MIN) FROM DN. STARTER SIG. NO. S16 UPTO DN. ADV. STR. SIG. NO. S2 WITH POINT NO. 101–102 NORMAL & 107–108, 103–104 REVERSE.
3.	S46C	120M (MIN) FROM DN. STARTER SIG. NO. S12 UPTO DN. ADV. STR. SIG. NO. S2 WITH POINT NO. 101–102 103–104, 105–106 NORMAL.
4.	S46D	120M (MIN) FROM DN. STARTER SIG. NO. S14 UPTO DS POINT NO.109 WITH POINT NO. 105–106 & 109 NORMAL.
5.	S46D1	120M (MIN) FROM DN. STARTER SIG. NO. S14 UPTO DN. ADV. STR. SIG. NO. S2 WITH POINT NO. 101–102,103–104 NORMAL & 105–106 REVERSE.

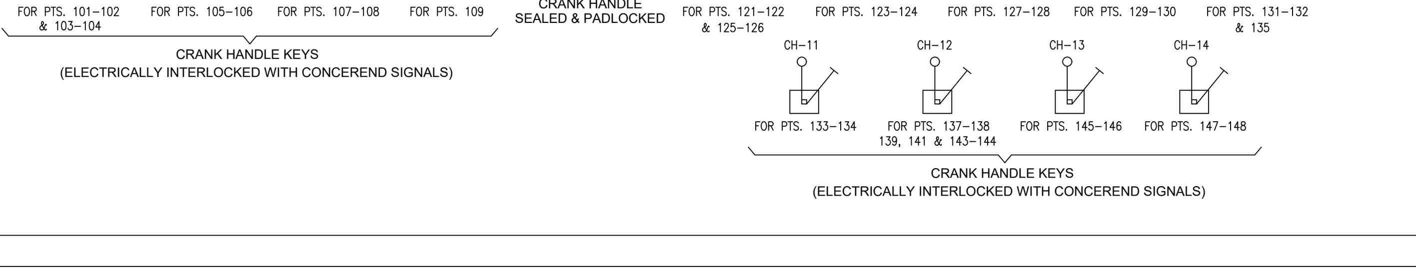

4. YARD TO BE MADE RE FIT.
3. STARTER RELEASED BY ADVANCED STARTER IS NOT PROVIDED AS PER RLY. BD's AND VIDE GM/S&T/MLG's LETTER NO.–
(i) 2008/SIG/G/4 DT. 17/09/2015 AND
(ii) N/224/0 Pt. XIX DT. 31/08/2017.
2. STARTER SIGNALS ARE TO BE PROVIDED AT A DISTANCE NOT MORE THAN 3M FROM BJ/GJ
1. ALL PTS. & CROSSING ARE 1 IN 12 EXCEPT OTHERWISE MENTIONED.

टिप्पणी NOTES

SCOPE OF WORK	NEW-BONGAIGAON - AGTHORI BG DOUBLING PROJECT
	B.G.
अन्तर्पाशन का मानक STD. OF INTERLOCKING	III
CLASS OF STATION	'B'
DEVIATION	NIL
इंजी योजना के अनुसार TO SUIT ENGG. PLAN NO.	CE / Y / 29 / 2021
सिगनल योजना का स्थान लेना SUPERSEDES SIG. PLAN NO.	

ALT	REF.	DESCRIPTION	DY.CSTE/C/PL	DATE OF OPENING	CRS's SANC. NO. & DATE
			(U. KALITA)		

एसएसइ नक्शा SSE/DRG.	एसएसइ नक्शा SSE/DRG.	एसएसइ सिग नि SSE/SIG/C	सहायक सिग एवं दूरसंचार नि के ASTE/C/PL	वरिष्ट सिग एवं दूरसंचार नि के SSTE/C/PL–II
	(T.K. MUKHERJEE)	(A. BARTHAKUR)	(H.K. DAS)	(K.L. DAS)

DRAWN | CHECKED | DATE

SCALE	
VERTICAL	1:500
HORIZONTAL	1:2000

बरपेटा रोड
BARPETA ROAD
SIGNALLING PLAN (E.I.)

मंडल रंगिया DIVISION RANGIYA

DRG. NO. नक्शा सं SG (SI) 3007 / 2

पूर्वोत्तर सीमा रेलवे संकेत एवं दूरसंचार विभाग
NORTHEAST FRONTIER RAILWAY – SIGNAL AND TELECOMMUNICATION DEPARTMENT.